Assembly Instructions for Treated Pine Swings

(Fanback Swing Shown)

Tools Needed for Assembly

- 7/16" socket and wrench
- 1/2" socket and wrench

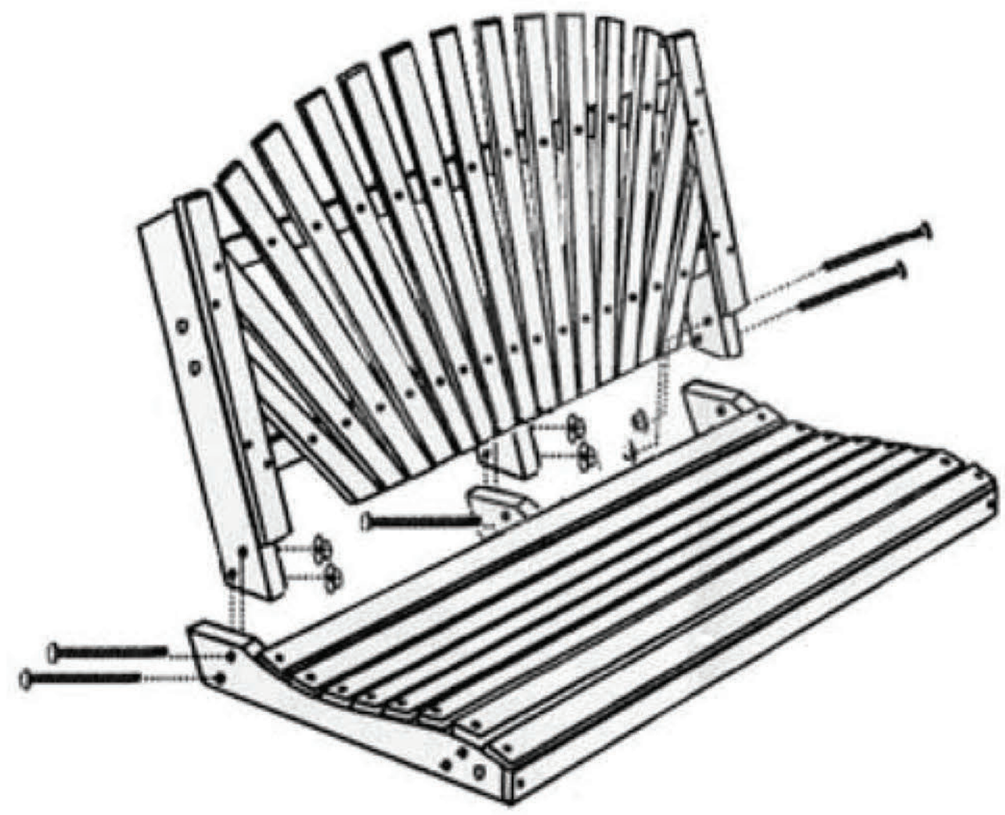

Step 1 Lay the seat section of the swing on a flat surface. Attach the back of the swing to the seat using six 3 ¼" carriage bolts and flange nuts. When connecting the backs, be sure that the flange nuts are to the inside of the swing. Do not fully tighten the nuts at this time.

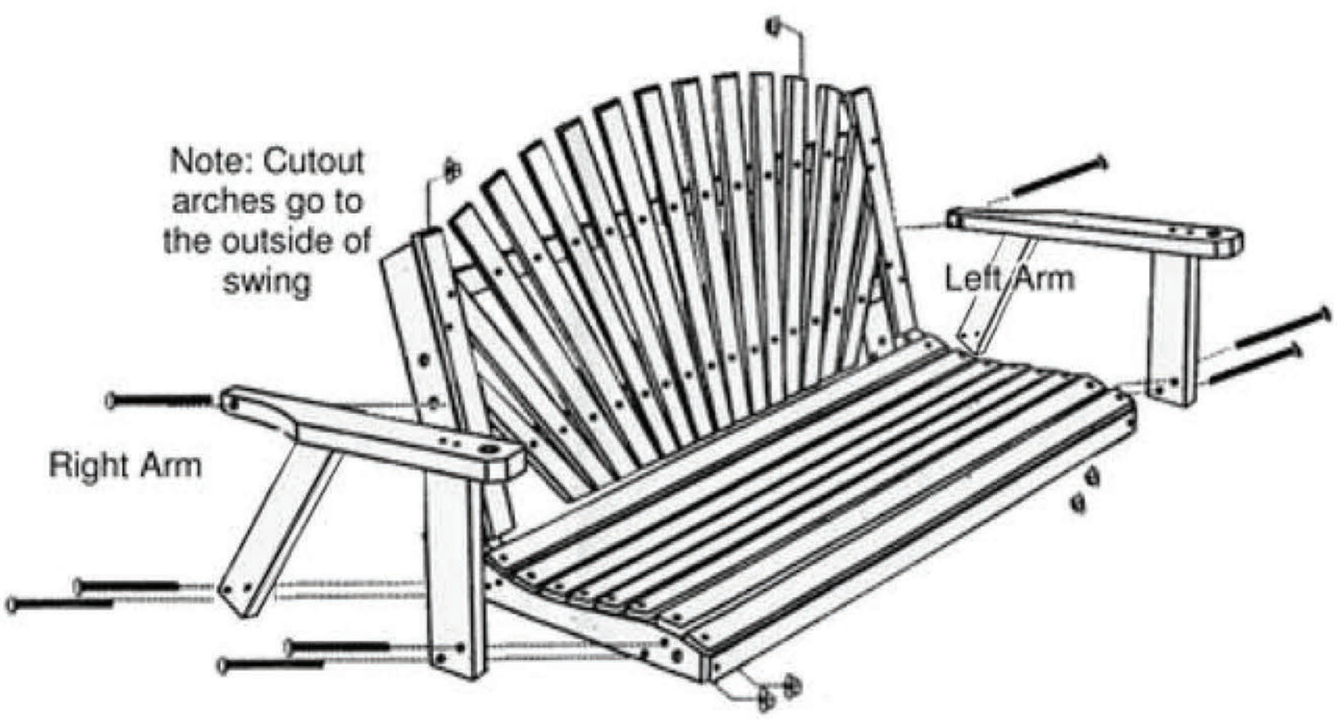

Step 2 When the back and seat are together, locate the left and right arms section. Attach them as shown using five carriage bolts and flange nuts on each arm. Again, make sure that the carriage bolts are inserted from the outside of the swing and the flange nuts are on the inside. Once all carriage bolts are inserted, tighten all of the nuts with a 7/16" socket wrench.

Step 3 Insert eye hooks in the pre-drilled holes with washer and locknut on the inside. Tighten using a ½" wrench.

Step 4 Examining the two chain assemblies, you will notice that there are two different lengths of chain on each set: The longest length will be attached to the front seat portion of the swing (be sure to insert chain through the hole in the arm before attaching to the hook). The shortest chain will connect to the back hook of the swing. (Attach the chain to both sides of the swing before hanging). Adjust the proper link of back (shortest) chain to accommodate desired seat pitch.

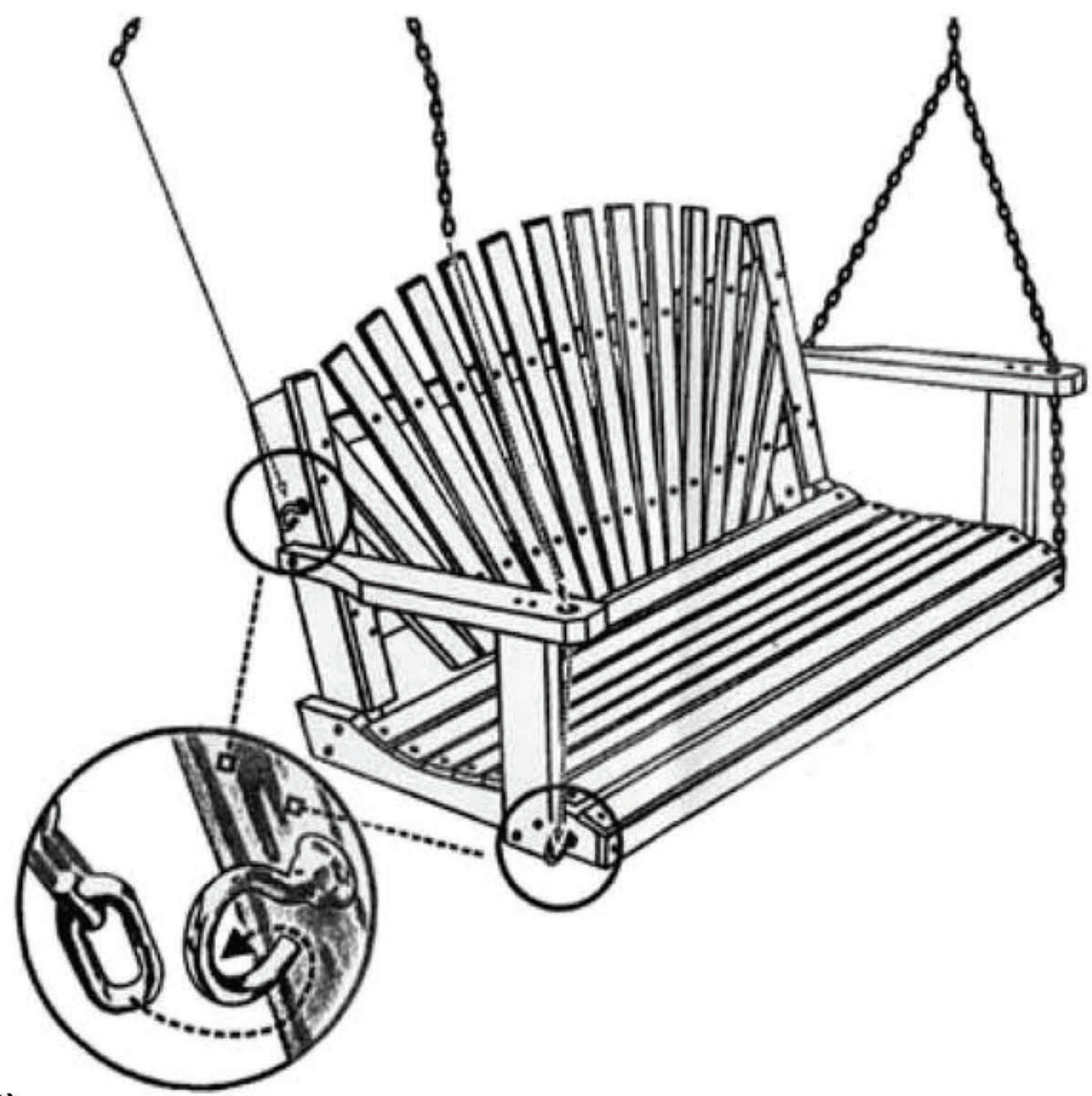

Parts List

Seat Assembly (1)
Back Assembly (1)
Left Arm (1)
Right Arm (1)

Hardware

3 1/4" x 1/4" Carriage Bolts (16)
Flange Nuts (16)
5/16" Eye Hooks (4)
Open Link w/ thread (2) ***with Stainless Steel Hardware ONLY**